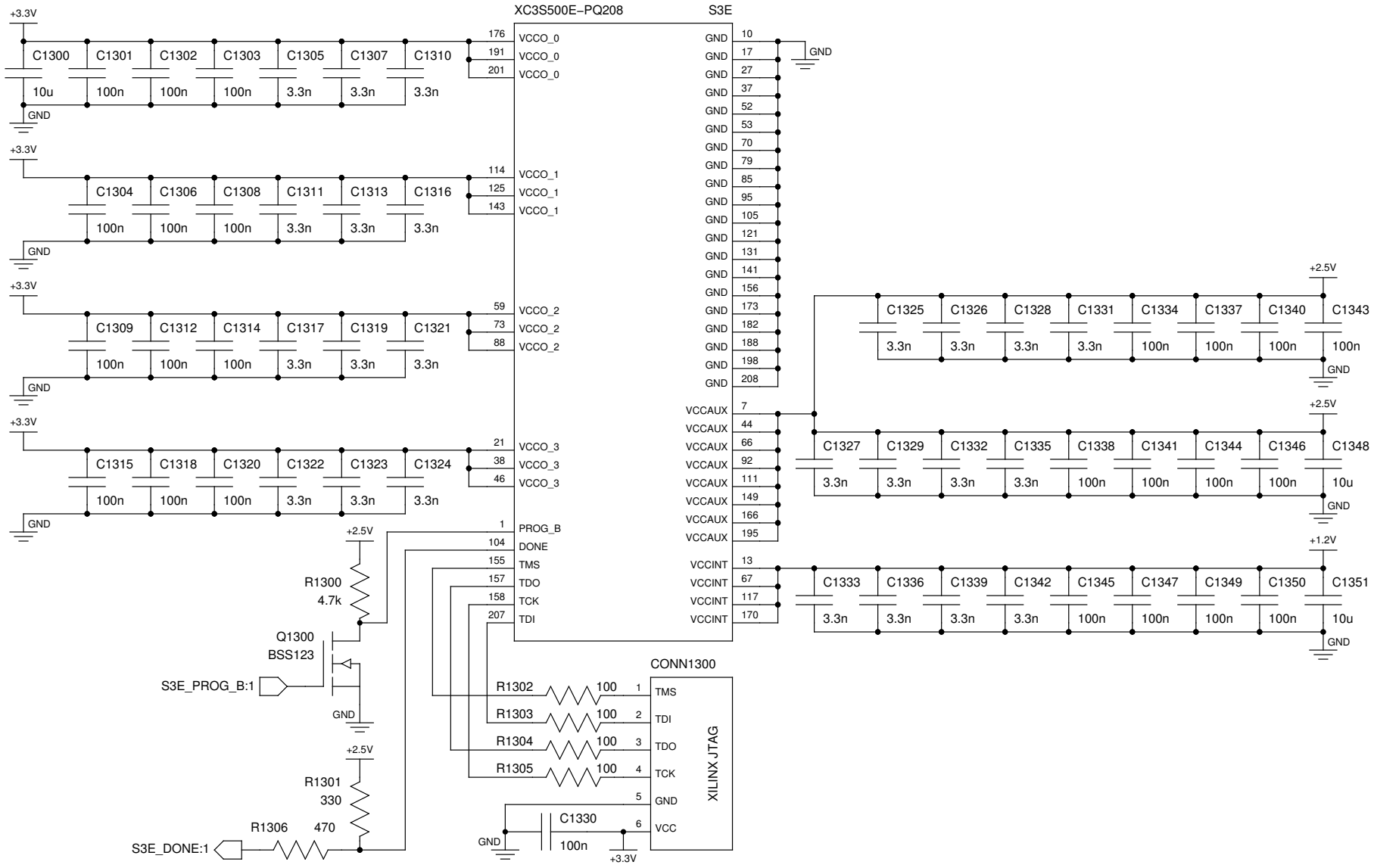

DAD/DSO, FPGA_Power	
FPGA_Power.sch	Sheet: 13 of 19
Author: S. Salewski	Rev: A 0.09
Copyright: All Rights Reserved	Date: 06−SEP−2009